FRAMECAD®

CATALOG

FRAMECAD Building Components

Connectors for Steel Framed Construction

For more information, details or a quote, please contact us at: framecad.com/contact-us

FRAMECAD Connectors: Engineered for Excellence

FRAMECAD Connectors are meticulously designed to ensure speed, suitability, and superior performance. Each connector plays a crucial role in delivering the most advanced and comprehensive end-to-end steel frame building solutions globally.

Our portfolio includes a wide range of connectors for steel truss, wall, and joist assemblies essential for construction. FRAMECAD connectors are crafted with four primary objectives in mind:

DESIGN:	Ease of design with correct information specified in FRAMECAD Software to deliver robust and reliable structures.
SPEED:	All connectors have been selected to optimise the speed and efficiency of the FRAMECAD building system. Using FRAMECAD screws reduces labour costs by making it quicker and easier to fix screws consistently, helping business reach optimum production rates, both in the factory and on-site.
SUITABILITY:	As the world leader in Cold Formed Steel construction technology FRAMECAD has developed FRAMECAD Connectors to further improve and advance this construction system. The protective green powder coating makes identification of FRAMECAD connectors easy during construction to ensure correct location and installation. The specified FRAMECAD Fasteners form a critical part of the connector's tested performance and substitution with noncompliant screws or components may compromise the integrity of the structure.
PERFORMANCE:	The design capacity of the connector range has been calculated in accordance with AS/NZ 4600:2018 and AISI S100:2020. FRAMECAD Fasteners have been tested according to the AS/NZS 4600:2018 and AISI S100:2020 to ensure they perform effectively with the FRAMECAD Building System as well as complying to all relevant manufacturing standards.

Table of contents

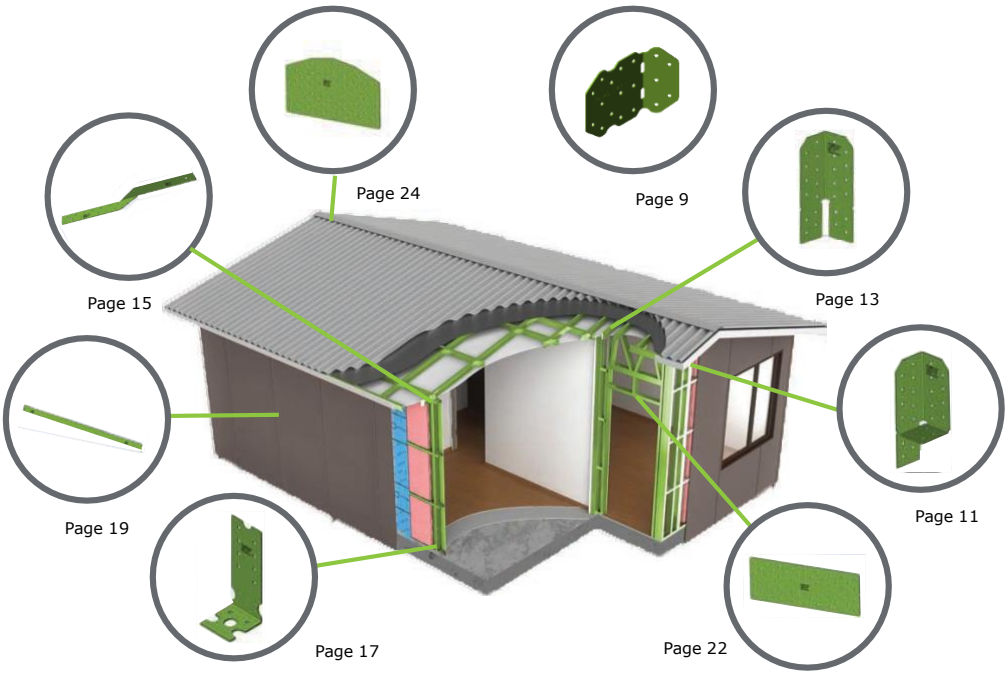

Compliance 4

FRAMECAD Connectors: Quality and Compliance 4

Substitution 4

Installation 5

FRAMECAD Erection Fasteners 5

Where to Screw, Fasteners Spacing, End and Edge Distance Requirement . 5

FRAMECAD Cold Formed Steel Specification 5

Truss Bracket TBR-A2 / TBL-A2 6

Multi Plate Connector MP-A1 9

Tri Fix Tie-down TF/R-A2 | TF/L-A2 111

Multi Fix Connector MF-A2 13

Twist Fix Strap TFS/R-A2 | TFS/L-A2 15

Holdown Fix & Washer HDF-A1 17

Strap Fix Bracing SF/32-A2 19

Strap Fix Tensioner PT-32 21

Fix Plate Connector FP-A2 22

Apex / Heel Connector Plate AHCP-A2 24

Compliance

FRAMECAD Connectors: Quality and Compliance

FRAMECAD Connectors are manufactured from high-quality steel that complies with AS/NZ 1397 G350 and ASTM A653M HSLAS Type A Grade 340 standards. Each connector features a galvanized Z275 coating and is further protected with FRAMECAD's long-life green protection coating to enhance corrosion resistance.

The design capacity of our connectors is calculated in accordance with AS/NZ 4600:2018 and AISI S100:2020 standards. FRAMECAD fasteners undergo rigorous testing to meet these standards and are produced in ISO 9001 certified facilities, ensuring consistent quality and reliability.

All constructions using FRAMECAD products must adhere to local, national, or international building regulations. FRAMECAD products are FRAMECAD Certified, and the ratings published in this guide are valid when the products are designed, installed, and used according to this guide and approved by a locally registered engineer.

Substitution

The performance of FRAMECAD connection solutions is sensitive to design detailing, products used and construction practices. All FRAMECAD connection solutions have been developed specifically for use with the FRAMECAD cold formed steel framing system and tested and assessed to ensure the required level of performance.

It is important to use only FRAMECAD branded components where specified and closely follow the design details and construction practices, so you can be confident that the required level of structural performance is achieved on site.

Installation

FRAMECAD Erection Fasteners

FRAMECAD Erection Fasteners have a Drill Point capable of drilling into medium to heavy gauge steel.

For successful connection, the screw must be of sufficient length to ensure at least three (3) threads are protruding through the fastened material.

The drill point length must exceed the combined thickness of both the fixture and the substrate, including any spaces or gaps, to ensure proper fastening

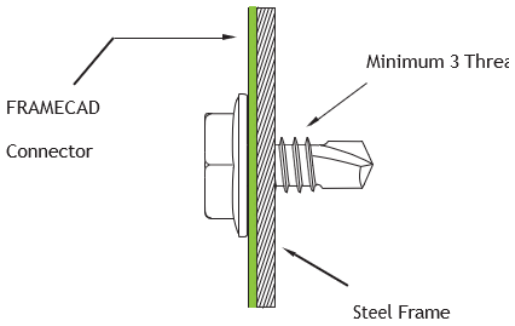

Where to Screw, Fasteners Spacing, End and Edge Distance Requirement

Min edge distance (a2) = 1.5df (approximately 8mm for 10g screws) Min Spacing (b1 or b2)= 3.0df (approximately 15mm for 10g screws) Where df = Nominal screw diameter (mm)

Notes:

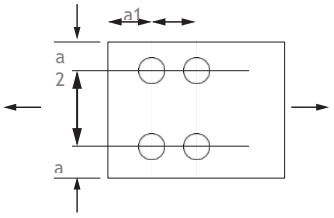

- The end distance is the distance to the edge of the steel measured in the rection of the applied force.
- To avoid tearing, the minimal end distance, a1, for our connector range is 8mm, unless otherwise specified.
- Use only the specified FRAMECAD connectors and specified FRAMECAD fastener type and quantity.
- Do not over load the joints or connectors.
- Any gaps in joints between steel members must not exceed 1.5mm.
- Do not weld connectors or drill additional fastener holes.
- Do not overtighten screws. Screws must be of sufficient length to ensure at least 3 threads protrude through the fastened material.

FRAMECAD Cold Formed Steel Specification

The design yield strength (Fy) and tensile strength (Fu) for cold-formed steel frame materials are specified in the table below.

		Fy (MPa)					**Fu (MPa)**				
		Frame Material Thickness BMT (mm)					Frame material thickness BMT (mm)				
AS 1397	ASTM A653	0.55	0.75	0.95	1.15	1.55	0.55	0.75	0.95	1.15	1.55
G350	50	N/A	350	350	350	350	N/A	420	420	420	420
G500	70	N/A	500	500	500	N/A	N/A	520	520	520	N/A
G550	80	410	495	550	N/A	N/A	410	495	550	N/A	N/A

Truss Bracket TBR-A2 / TBL-A2

Application:

The Truss Bracket suits a wide range of Truss Frame connections.

The unique geometry forms a truss tie-down that allows for direct fixing to walls studs, as required for resisting high uplift forces. Alternatively, the bracket may be used to tie trusses directly to the wall top plate when a thermal block or doubler plate is present.

Truss Brackets also provide a specialist plate to strengthen connections in roof and floor truss fabrication, and form part of the FRAMECAD certified system.

Truss Brackets are supplied with 90-degree prebend in Left and Right formations. The short tab is to be bent horizontal on site to suit the application.

Patent Protected.

Item Code	313600	
Profile		
Steel Grade	G350: t = 1.15mm BMT*	
Application	Steel Frame: t = 0.75 to 1.55mm BMT*	
Finish	Galvanized Z275 with Protective Green Powder Coating	
Packaging	50 units total, 25 each of Left and Right	

* BMT = Base Material Thickness

Installation:

Truss Frame Connection Plate Application: Refer to FRAMECAD framing system manuals for details.

Truss Tie-Down Application: Bend short tab inwards to the horizontal, and fix with 10g screws as specified in the tie-down design capacity tables, or to Engineer's specification.

For fixing use FRAMECAD 10g HWH FrameFix screws, or for applications that require a flush finish, use FRAMECAD Flathead screws.

Product	Item Code	Size	Description	Carton Qty
HWH FrameFix DP	Ideal for panel to panel fixing during frame erection and for attaching connectors to framing members			
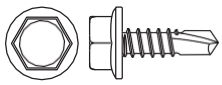	307387	10g x 19mm	Hex Head FrameFix DP, 1000hrs, Loose	5,000
FRAMECAD Flathead	Ideal for connecting metal strapping or bracing and adding additional strength to connectors.			
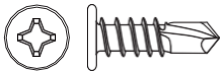	001539	10g x 16mm	FRAMECAD Flathead DP, 1000hrs, Loose	10,000

Truss Bracket Tie-Down Connector Design Capacities

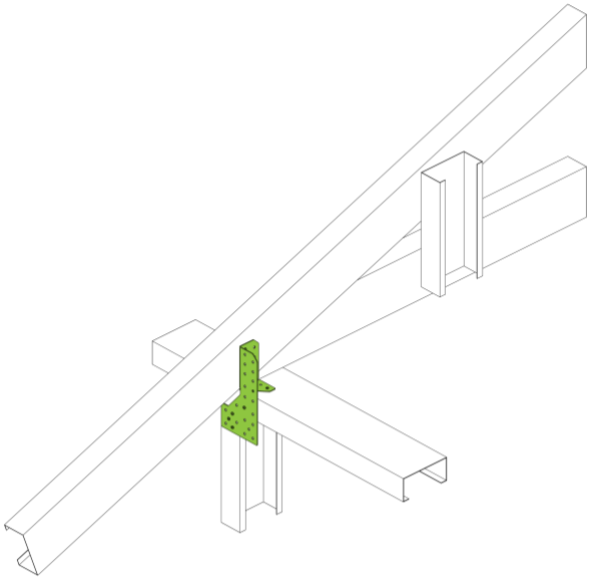

Truss connection to single top plate

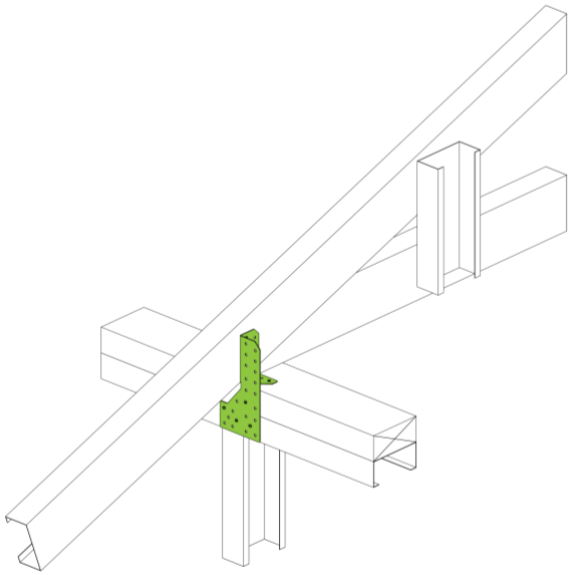

Truss connection to two top plates

Design Capacity - LRFD Force (kN)				AS/NZS 4600 / AISI S100								
Item Code	Bracket Gauge (mm)	Steel Grade (Framing)	Number of screws required for Uplift Restraint	Steel Thickness Framing (BMT)								
				0.75mm		0.95mm		1.15mm		1.55mm		Total Screws
				F1	F2	F1	F2	F1	F2	F1	F2	
313600	1.15	G350	2 – 10g	2.5	2.5	3.6	3.6	4.8	4.8	6.1	5.1	7
			3 – 10g	3.8	2.5	5.4	3.6	7.1	4.8	9.1	5.1	9
			4 – 10g	5.1	2.5	7.2	3.6	9.1	4.8	9.1	5.1	11
		G500	2 – 10g	3.1	3.1	4.4	4.4	5.9	5.1	N/A	N/A	7
			3 – 10g	4.7	3.1	6.6	4.4	8.9	5.1	N/A	N/A	9
			4 – 10g	6.3	3.1	8.8	4.4	9.1	5.1	N/A	N/A	11
		G550	2 – 10g	3.0	3.0	4.4	4.4	N/A	N/A	N/A	N/A	7
			3 – 10g	4.5	3.0	6.6	4.4	N/A	N/A	N/A	N/A	9
			4 – 10g	6.0	3.0	8.8	4.4	N/A	N/A	N/A	N/A	11

1. In addition to providing uplift screws to both truss and wall frame, provide 2 screws to horizontal leg and 1 additional screw to upper half of the vertical leg.
2. Not all fastener holes need to be filled, multiple fastener holes are provided to give options for screw location.
3. LRFD Force is the LRFD Design capacity according to AISI S100 and equal to the Ultimate Limit State (ULS) design capacity according to AS/NZS 4600.
4. The nominal shear strength of the screw connections are limited by tearing when critical, with a minimum edge distance of 8mm.

Ordering and Packaging

Item Code	Description	Qty
313600	TBR-A2 / TBL-A2 Truss Bracket Connector 1.15mm	50

Multi Plate Connector MP-A1

Application:

The Multi Plate connector bracket suits a wide range of frame-to-frame connections. Use it for the erection of hip and valley roof trusses. Supplied with 45-degree prebend, adjustable from 0 to 135 degrees (bend once only).

Patent Protected.

Item Code	116975
Profile	
Steel Grade	G300: t = 1.5mm BMT*
Application	Steel Frame: t = 0.75 to 1.15mm BMT*
Finish	Galvanized Z275 with Protective Green Powder Coating
Packaging	50 units per carton

* BMT = Base Material Thickness

Installation:

Use FRAMECAD HWH FrameFix screws, or for applications that require a flush finish, use FRAMECAD Flathead screws.

For screw numbers please refer to engineers' specifications.

Product	Item Code	Size	Description	Carton Qty
HWH FrameFix DP	Ideal for panel to panel fixing during frame erection and for attaching connectors to framing members			
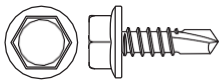	307387	10g x 19mm	Hex Head FrameFix DP, 1000hrs, Loose	5,000
	002409	12g x 25mm	Hex Head FrameFix DP, 1000hrs, Loose	5,000
FRAMECAD Flathead	Ideal for connecting metal strapping or bracing and adding additional strength to connectors.			
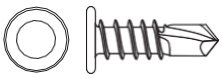	001539	10g x 16mm	FRAMECAD Flathead DP, 1000hrs, Loose	10,000

Multi Plate Connector Design Capacity

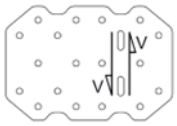

Shear Force (kN): AS/NZS 4600 /AISI S100

Fixing Method 10gx19 mm HWH FrameFix DP			Framing Material AS - 1397: 2021			
				Steel Thickness		
Screw Pattern	**Screw Location**	**Total No. Screws**	**Steel Grade**	**0.75mm BMT**	**0.95mm BMT**	**1.15mm BMT**
JFA	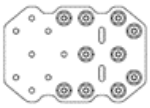	10	G500	4.9	6.8	7.5
			G550	4.6	6.8	-
			G350	3.9	5.6	7.3
JFB	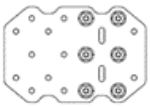	6	G500	3.8	5.4	6.8
			G550	3.6	5.4	-
			G350	3.1	4.4	5.8
JFC	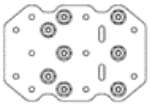	8	G500	3.2	4.5	5.7
			G550	3.0	4.5	-
			G350	2.6	3.7	4.8
JFD	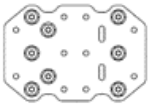	8	G500	2.7	3.7	4.8
			G550	2.5	3.7	-
			G350	2.1	3.1	4.0
JFE	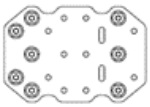	8	G500	2.0	2.9	3.6
			G550	1.9	2.9	-
			G350	1.6	2.3	3.1
JFF	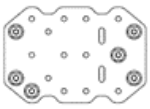	6	G500	1.0	1.4	1.8
			G550	0.9	1.4	-
			G350	0.8	1.2	1.5

Ordering and Packaging

Item Code	Description	Qty
116975	MP-A1 – Multi Plate Connector 1.5mm	50

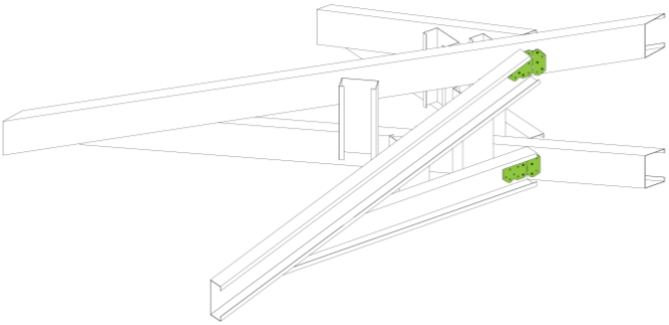

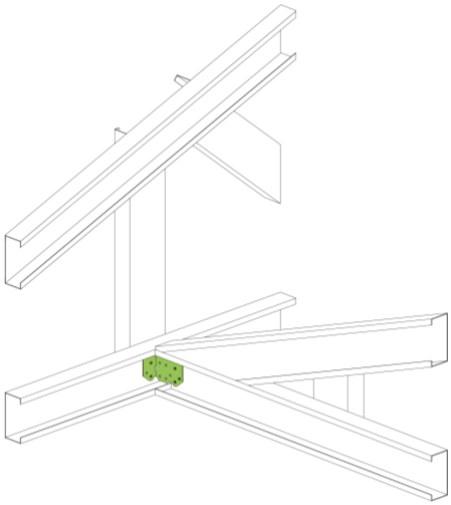

framecad.com

Tri Fix Tie-down TF/R-A2 | TF/L-A2

Application:

Used to tie-down roof trusses, joists or rafters to the wall frame. Can also be used in cyclonic environments when fixed on both sides of the wall plate, with appropriate plate to stud fixing.

Item Code	009808 (Left)	009806 (Right)
Profile	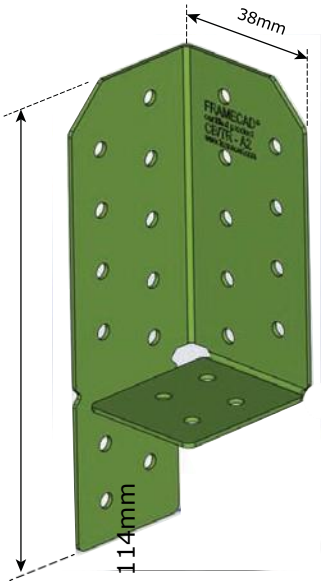	
Steel Grade	G350 t = 1.15mm BMT*	
Application	Steel Frame: 0.75 to 1.55mm BMT*	
Finish	Galvanized Z275 with Protective Green Powder Coating	
Packaging	50 units total, 25 each of Left and Right	

* BMT = Base Material Thickness

Installation:

Use FRAMECAD Certified Hex Head screws or, for applications that require a flush finish, use FRAMECAD Flathead screws. For quantity of screws refer to the Design Capacities Tables.

Product	Item Code	Size	Description	Carton Qty
HWH FrameFix DP	Ideal for panel to panel fixing during frame erection and for fixing connectors.			
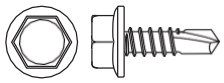	307387	10g x 19mm	Hex Head FrameFix DP, 1000hrs, Loose	5,000
FRAMECAD Flathead	Ideal for connecting metal strapping or bracing and adding additional strength to connectors.			
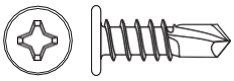	001539	10g x 16mm	FRAMECAD Flathead DP, 1000hrs, Loose	10,000

Tri Fix Design Capacities

Design Capacity - LRFD Force (kN)				AS/NZS 4600 / AISI S100								
Item Code	Bracket Gauge	Steel Grade (Framing)	Number of screws required (Uplift Restraint)	Steel Thickness Framing (BMT)								
				0.75mm		0.95mm		1.15mm		1.55mm		Total Screws
				F1	F2	F1	F2	F1	F2	F1	F2	
009806 & 009808	1.15mm	G350	2 – 10g	2.5	2.5	3.6	3.6	4.8	4.8	6.1	5.1*	6
			3 – 10g	3.8	2.5	5.4	3.6	7.1	4.8	9.1	5.1*	8
		G500	2 – 10g	3.1	3.1	4.4	4.4	5.9	5.1*	N/A	N/A	6
			3 – 10g	4.7	3.1	6.6	4.4	8.9	5.1*	N/A	N/A	8
		G550	2 – 10g	3.0	3.0	4.4	4.4	N/A	N/A	N/A	N/A	6
			3 – 10g	4.5	3.0	6.6	4.4	N/A	N/A	N/A	N/A	8

1. Not all fastener holes need to be filled, additional fastener holes are provided to give options for screw location.
2. LRFD Force is the LRFD Design capacity according to AISI S100 and equal to the Ultimate Limit State (ULS) design capacity according to AS/NZS 4600.
3. The nominal shear strength of the connection is limited by tearing when critical, with a minimum edge distance of 8mm.
4. A minimum of 2 screws must be used for horizontal restraint.
5. *Connection capacity is limited by the steel strength of the Bracket.

Ordering and Packaging

Item Code	Description	Qty
009806	TF/R-A2 - Tri Fix Right - 1.15mm	25
009808	TF/L-A2 - Tri Fix Left - 1.15mm	25

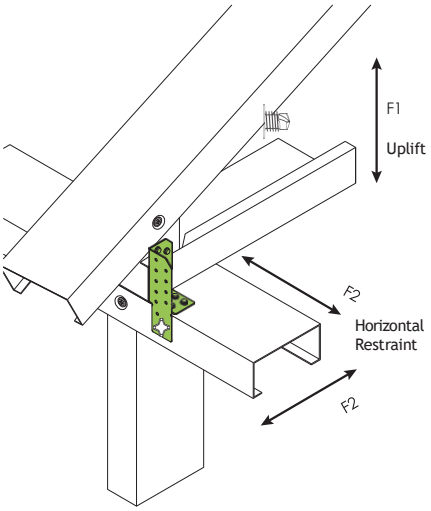

Multi Fix Connector MF-A2

Application:

The Multi Fix connector can be used at a 90-degree angle, or with either leg bent as a Tri Fix connector, allowing maximum flexibility in multiple applications. Use the Multi Fix Connector to tie down roof trusses and rafters and to connect trusses.

Item Code	313459
Profile	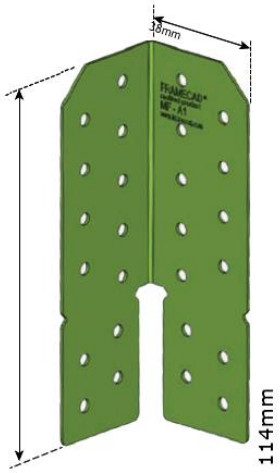
Steel Grade	G350 t = 1.15mm BMT *
Application	Steel Frame: 0.75 to 1.55mm BMT *
Finish	Galvanized Z275 with Protective Green Powder Coating
Packaging	50 units of each type

* BMT = Base Material Thickness

Installation:

The bending slot allows for easy and accurate on-site bending. The Multi Fix can be bent into position only once along the bending slot.

Use FRAMECAD Certified HWH FrameFix drill point screws, or for applications requiring a flush finish, use FRAMECAD Flathead screws.

Product	Item Code	Size	Description	Carton Qty
HWH FrameFix DP	Ideal for panel to panel fixing during frame erection and for fixing connectors.			
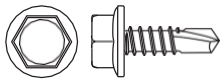	307387	10g x 19mm	Hex Head FrameFix DP, 1000hrs, Loose	5,000
FRAMECAD Flathead	Ideal for connecting metal strapping or bracing and adding additional strength to connectors.			
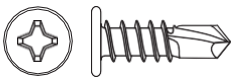	001539	10g x 16mm	FRAMECAD Flathead DP, 1000hrs, Loose	10,000

Multi Fix Design Capacities

Installation Type A				Design Capacity - LRFD Force (kN)								AS/NZS 4600 / AISI S100
Item Code	Bracket Gauge	Steel Grade (Framing)	Number of screws required (Uplift Restraint)	Steel Thickness Framing (BMT)								
				0.75mm		0.95mm		1.15mm		1.55mm		Total Screws
				F1	F2	F1	F2	F1	F2	F1	F2	
313459	1.15mm	G350	2 – 10g	2.5	2.5	3.6	3.6	4.8	4.8	6.1	5.1*	6
			3 – 10g	3.8	2.5	5.4	3.6	7.1	4.8	9.1	5.1*	8
		G500	2 – 10g	3.1	3.1	4.4	4.4	5.9	5.1*	N/A	N/A	6
			3 – 10g	4.7	3.1	6.6	4.4	8.9	5.1*	N/A	N/A	8
		G550	2 – 10g	3.0	3.0	4.4	4.4	N/A	N/A	N/A	N/A	6
			3 – 10g	4.5	3.0	6.6	4.4	N/A	N/A	N/A	N/A	8

Installation Type B				Design Capacity - LRFD Force (kN)								AS/NZS 4600 / AISI S100
Item Code	Bracket Gauge	Steel Grade (Framing)	Number of screws required (Uplift Restraint)	Steel Thickness Framing (BMT)								
				0.75mm		0.95mm		1.15mm		1.55mm		Total Screws
				F1	F2	F1	F2	F1	F2	F1	F2	
313459	1.15mm	G350	3 – 10g	3.1	N/A	4.4	N/A	5.8	N/A	7.3	N/A	6
		G500	3 – 10g	3.8	N/A	5.4	N/A	6.8	N/A	N/A	N/A	6
		G550	3 – 10g	3.6	N/A	5.4	N/A	N/A	N/A	N/A	N/A	6

1. Not all fastener holes need to be filled, additional fastener holes are provided to give options for screw location.
2. LRFD Force is the LRFD design capacity to AISI S100 and the Ultimate Limit State (ULS) design capacity to AS/NZS 4600.
3. The nominal shear strength of the connection is limited by tearing when critical, with a minimum edge distance of 8mm.
4. A minimum of 2 screws must be used for the F2 horizontal restraint.
5. The Multi Fix may only be bent into position once along the bending slots.
6. *Connection capacity is limited by the steel strength of the Bracket.

MF-A2
Installation
Type A

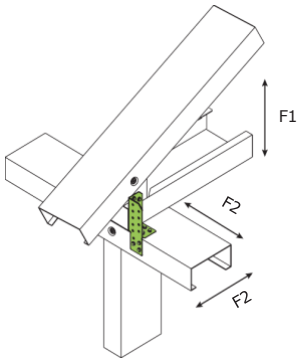

MF-A2
Installation
Type B

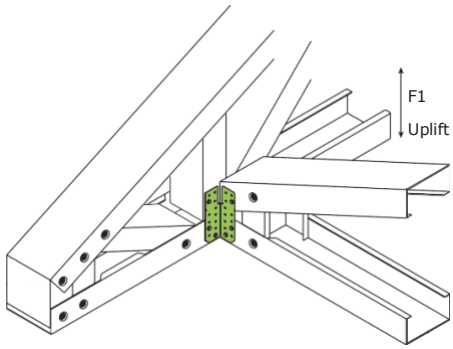

Ordering and Packaging

Item Code	Description	Qty
313459	MF-A2 - Multi Fix Connector 1.15mm	50

Twist Fix Strap TFS/R-A2 | TFS/L-A2

Application:

Used as a heavy-duty tie-down for roof trusses, joists, or rafters in high wind zones or where high-strength connections are required. The connector's geometry accommodates a high number of fasteners and enables the tie to be fixed directly along the length of the stud.

Item Code	009812 (Left)	009810 (Right)
Profile	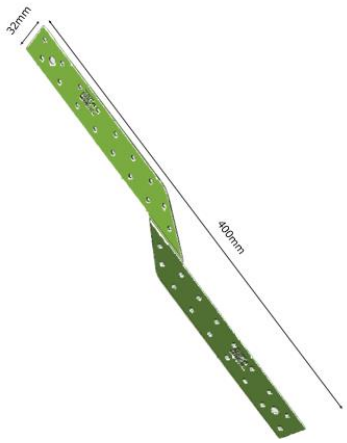	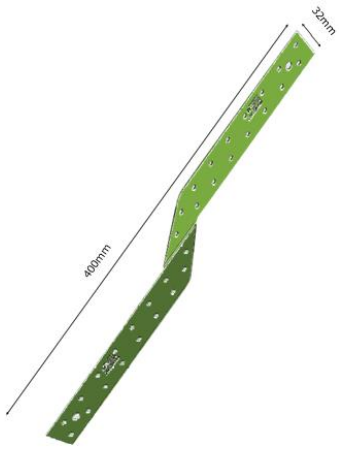
Steel Grade	G350 t = 1.15mm BMT*	
Application	Steel Frame: 0.75 to 1.55mm BMT*	Steel Frame: 0.75 to 1.55mm BMT*
Finish	Galvanized Z275 with Protective Green Powder Coating	
Packaging	50 units of each type	

* BMT = Base Material Thickness

Installation:

The Twist Fix Strap can be bent over the truss during installation. It must form a direct connection between the truss, joist, or rafter and the wall stud.

Use the specified number of FRAMECAD 10g Hex Head screws, or for applications requiring a flush finish, use FRAMECAD 10g Flathead screws. Refer to the Design Capacities Table for the required quantity of screws at each end of the Twist Fix Strap.

Product	Item Code	Size	Description	Carton Qty
HWH FrameFix DP	Ideal for panel to panel fixing during frame erection and for fixing connectors.			
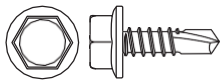	307387	10g x 19mm	Hex Head FrameFix DP, 1000hrs, Loose	5,000
	002409	12g x 25mm	Hex Head FrameFix DP, 1000hrs, Loose	5,000
FRAMECAD Flathead	Ideal for connecting metal strapping or bracing and adding additional strength to connectors.			
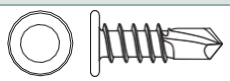	001539	10g x 16mm	FRAMECAD Flathead DP, 1000hrs, Loose	10,000

Twist Fix Strap Design Capacities

Design Capacity - LRFD Force (kN)				AS/NZS 4600 / AISI S100				
Item Code	Bracket Gauge	Steel Grade (Framing)	Number of screws required (Uplift Restraint)	Steel Thickness Framing (BMT)				
				0.75mm	0.95mm	1.15mm	1.55mm	Total Screws
009810 & 009812	1.15mm	G350	4 - 10g	5.0	7.2	8.8	8.8	8
			6 - 10g	7.5	8.8	8.8	8.8	12
		G500	4 - 10g	6.2	8.8	8.8	N/A	8
			6 - 10g	8.8	8.8	8.8	N/A	12
		G550	4 - 10g	6.0	8.8	N/A	N/A	8
			6 - 10g	8.8	8.8	N/A	N/A	12

1. Not all fastener holes need to be filled, additional fastener holes are provided to give options for screw location. Install fasteners symmetrically.
2. Install half of the total fasteners on each end of the strap to achieve full listed load capacity
3. LRFD Force is the LRFD Design capacity according to AISI S100 and equal to the Ultimate Limit State (ULS) design capacity according to AS/NZS 4600.
4. The nominal shear strength of the connection is limited by tearing when critical, with a minimum edge distance of 8mm.

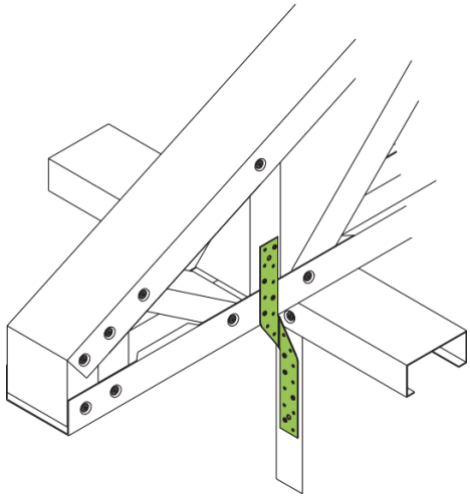

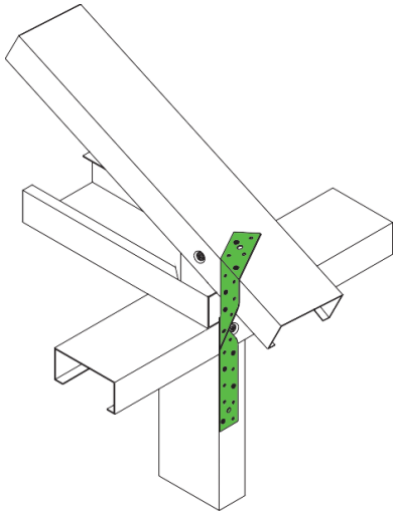

The Twist Fix Strap can be bent over the truss to allow for additional screw placement.

Ordering and Packaging

Item Code	Description	Qty
009810	TFS/R-A2 - Twist Fix Strap (Right) 1.15mm	50
009812	TFS/L-A2 - Twist Fix Strap (Left) 1.15mm	50

Holdown Fix & Washer HDF-A1

Application:

The Holdown Fix & Washer anchoring system is designed to secure steel frame structures to concrete, steel, or timber foundations and floors.

The special geometry of the bracket and washer allows for close placement to one side of the stud, increasing the concrete slab edge distance and maximizing the capacity of the anchor system.

FRAMECAD's Holdown Fix & Washer, combined with the FRAMECAD Screw Bolt, provides a high-strength anchoring solution to resist uplift forces typical in light-framed single and two-story dwellings.

Item Code	009815	
Profile		
Steel Grade	Bracket: G350 - 1.15mm	Washer (009688): G350 - 6mm
Application	Steel Frame 0.55 to 1.55mm BMT*	
Finish	Galvanized Z275 with Protective Green Powder Coating	
Packaging	25 units per carton (washer included)	

* BMT = Base Material Thickness

Installation:

The Holdown Fix & Washer anchoring system must be installed using the included washer, the specified number of FRAMECAD 12g HWH FrameFix screws, and an anchor bolt or screws with a design tension strength that meets the required design capacities.

Product	Item Code		Description	Carton Qty
HWH FrameFix DP	Ideal for panel to panel fixing during frame erection and for fixing connectors.			
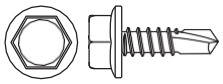	307387	10g x 19mm	Hex Head FrameFix DP, 1000hrs, Loose	5,000
	002409	12g x 25mm	Hex Head FrameFix DP, 1000hrs, Loose	5,000

Holdown Fix & Washer Design Capacities

Design Capacity - LRFD Force (kN)			AS/NZS 4600 / AISI S100		
Item Code	Steel Grade (Framing)	Number & Size of screws	Steel Thickness Framing (BMT)		
			0.55mm	0.75mm	≥0.95mm
009815	G350	6 - 12g	-	8.1	12*
		8 - 12g	-	10.7	12*
	G500	6 - 12g	-	10.0	12*
		8 - 12g	-	12*	12*
	G550	6 - 12g	4.9	9.6	12*
		8 - 12g	6.6	12*	12*

1. LRFD Force is the LRFD Design capacity according to AISI S100 and equal to the Ultimate Limit State (ULS) design capacity according to AS/NZS 4600.
2. Use the specified number of FRAMECAD certified Hex Head 12g screws.
3. Fix to Base with Anchors with a Design Tension Strength that meets the Design Capacity.
4. *Capacity limited by the design strength of the Holdown Bracket determined by testing.

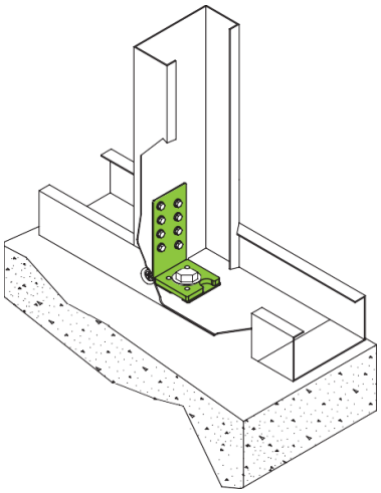

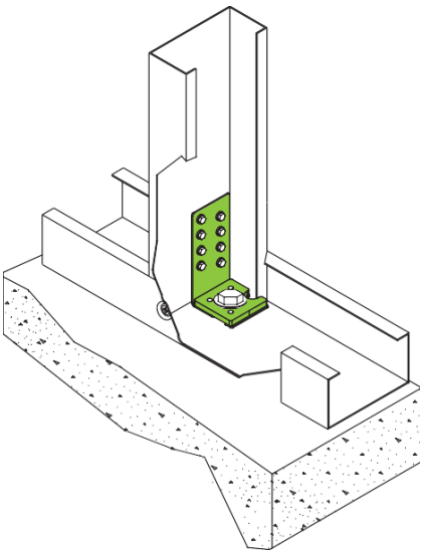

The design of the Bracket and Washer allows fixing close to one side of the framing to increase slab edge distance and maximise capacity of the anchor system.

Ordering and Packaging

Item Code	Description	Qty
009815	HDF-A1 Holdown Anchor 1.15mm & 6mm Flat Washer	25

Strap Fix Bracing SF/32-A2

Application:

Used to brace roof, wall, and ceiling panels, Strap Fix is available in long coils with multiple holes, making it easy to use on site. It can also serve as a tie-down for wall frames or trusses.

Item Code	009814
Profile	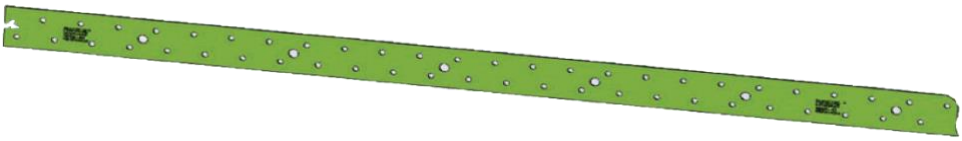
Description	SF/32-A2 32mm Strap Fix
Steel Grade	009815: G350 - 1.15mm BMT*
Application	Steel Frame 0.75 to 1.55mm BMT*
Finish	Galvanized Z275
Packaging	1 x 50mtr coil per carton

* BMT = Base Material Thickness

Installation:

To function as a structural bracing system, the bracing straps must be tensioned using the FRAMECAD Strap Fix Tensioner PT32.

After tensioning, the straps must be screwed to each stud they cross.

Ensure that each length of the strap has a properly tightened tensioner before securing it to the stud.

Refer to the Strap Fix Bracing Design Capacities table on the following page for the required quantity of screws.

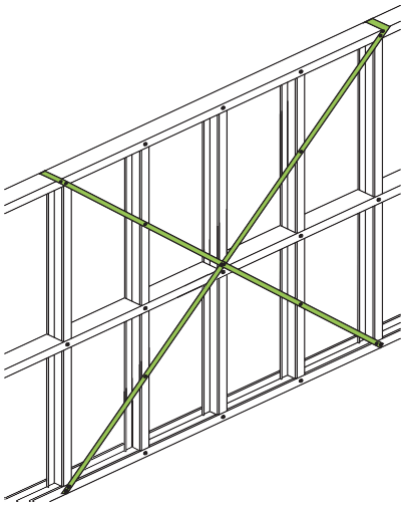

Product	Item Code	Size	Description	Carton Qty
HWH FrameFix DP	Ideal for panel to panel fixing during frame erection and for fixing connectors.			
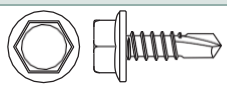	307387	10g x 19mm	Hex Head FrameFix DP, 1000hrs, Loose	5,000
FRAMECAD Flathead	Ideal for connecting metal strapping or bracing and adding additional strength to connectors.			
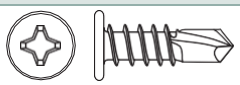	001539	10g x 16mm	FRAMECAD Flathead DP, 1000hrs, Loose	10,000

Strap Fix Bracing Design Capacities

Design Capacity - LRFD Force (kN)				AS/NZS 4600 / AISI S100		
	Number of screws each end – Screw Gauge					
Item Code	**Frame Steel Grade**	**Frame Material Thickness BMT (mm)**				**Allowable Loads**
		0.75mm	**0.95mm**	**1.15mm**	**1.55mm**	
009814 SF/32-A2	G350	7 – 10g	5 – 10g	4 – 10g	4 – 10g	8.8
	G500	6 – 10g	5 – 10g	4 – 10g	N/A	
	G550	6 – 10g	5 – 10g	N/A	N/A	

1. Not all fastener holes need to be filled, additional fastener holes are provided. Install fastener symmetrically.
2. LRFD Strength is the LRFD Design capacity according to AISI S100 and is the Ultimate Limit State (ULS) design capacity according to AS/NZS 4600.
3. Nominal shear strength of the connection is limited by tearing when critical with an 8mm minimum edge distance.
4. The tables values are the quantity of fastener at each end of the Strap Fix Brace.

Ordering and Packaging:

Item Code	Description	Qty
009814	SF/32-A2 Strap Fix 1.15mm 32mm x 50 meters	1 x 50 mtr Coil

Strap Fix Tensioner PT-32

Application:

Used in conjunction with FRAMECAD Strap Fix to brace roofs, walls and ceiling panels. The Strap Tensioner is easily installed on strap bracing to apply load to bracing systems to effectively resist deflection.

Designed for steel frames up to 1.55mm (BMT).

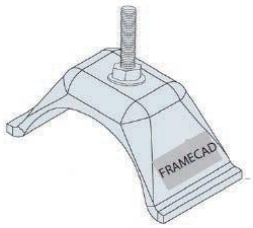

Features & Benefits:

- Galvanized Z275
- Manufactured to Steel grade AS/NZ 1397 G450 - Hi Tensile Steel
- Max Extension attributable to the unit 4.0mm
- Compliant with: AS 4440 clause 4.3.2 steel brace

Installation:

The Strap Fix Tensioner can easily and quickly tension the Strap Fix simply by driving the Hex head screw. FRAMECAD Strap Fix takes the load in tension only and should be used in pairs; one Strap fix Tensioner on each Strap Fix.

Ordering and Packaging:

Item Code	Description	Qty
308321	PT-32 Strap brace tensioner Hi tensile Steel	100

Fix Plate Connector FP-A2

Application:

Used to locally reinforce connection strength and connect cold formed steel panels.

Item Code	009801
Profile	 FRAMECAD certified product FP A1
Steel Grade	FP-A2: G350 - 1.15mm BMT*
Application	Steel Frame 0.95 to 1.55mm BMT*
Finish	Galvanized Z275 with Protective Green Powder Coating
Packaging	50 units per carton

* BMT = Base Material Thickness

Installation:

Use FRAMECAD FrameFix Hex Head, or for applications that require a flush finish, use FRAMECAD Flathead Screws.

Product	Item Code	Size	Description	Carton Qty
HWH FrameFix DP	Ideal for panel to panel fixing during frame erection and for fixing connectors.			
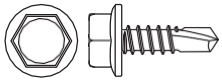	307387	10g x 19mm	Hex Head FrameFix DP, 1000hrs, Loose	5,000
	002409	12g x 25mm	Hex Head FrameFix DP, 1000hrs, Loose	5,000
FRAMECAD Flathead	Ideal for connecting metal strapping or bracing and adding additional strength to connectors.			
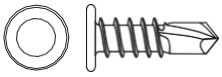	001539	10g x 16mm	FRAMECAD Flathead DP, 1000hrs, Loose	10,000

Fix Plate Design Capacities

Design Capacity - LRFD Force (kN)		AS/NZS 4600 / AISI S100	
Item Code	**Plate Thickness (mm)**	**F1 Tension Capacity (kN)**	**F2 Shear Capacity (kN)**
009801	1.15mm	32.2	18

1. Not all fastener holes need to be filled, additional fastener holes are provided.
2. For screw numbers refer to engineers' specifications.

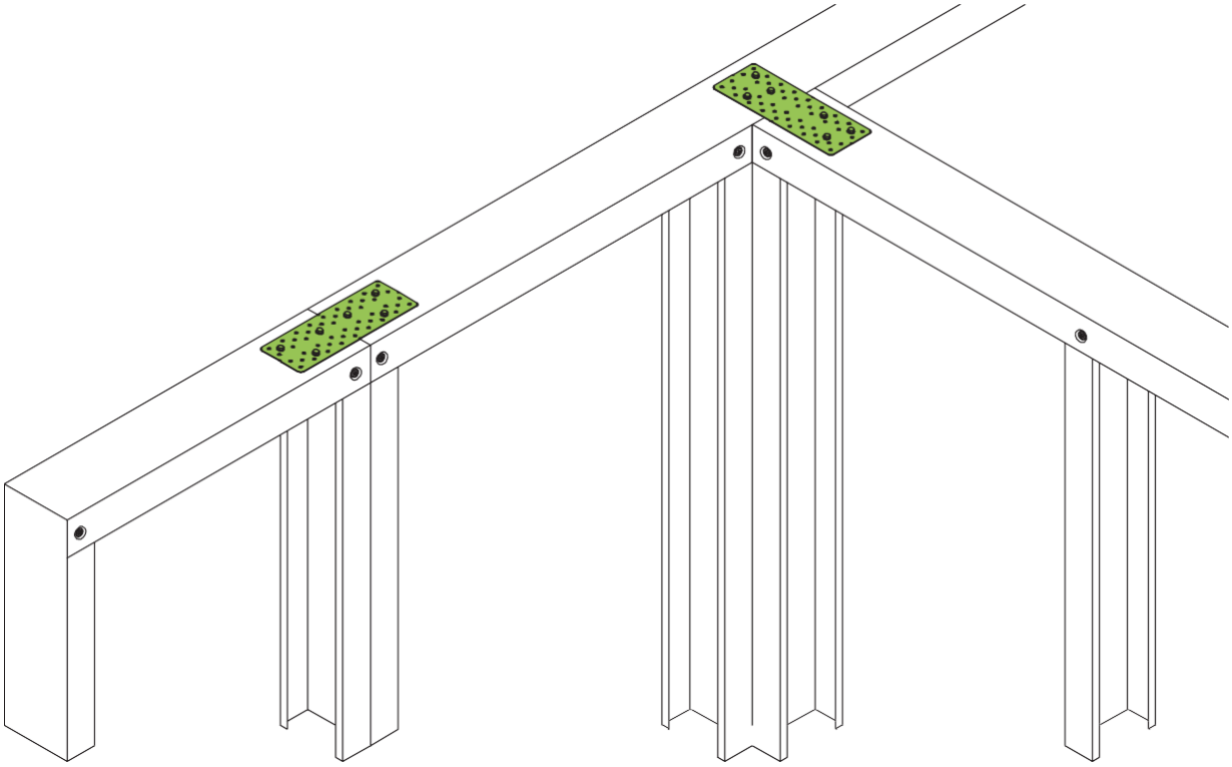

Ordering and Packaging:

Item Code	Description	Qty
009801	FP-A2 Fix Plate Connector 1.15mm	50

Apex / Heel Connector Plate AHCP-A2

Application:

Suitable to locally reinforce connection strength of Heel and Apex of any Truss with a pitch of 8° to 32°. Patent Protected.

Item Code	009803
Profile	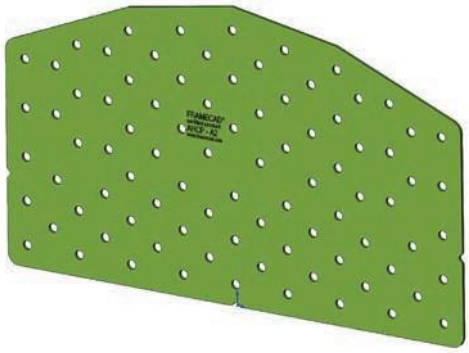
Steel Grade	AHCP-A2: G350 - 1.15mm BMT*
Application	Steel Frame 0.95 to 1.55mm BMT*
Finish	Galvanized Z275 with Protective Green Powder Coating
Packaging	50 units per carton

* BMT = Base Material Thickness

Installation:

Use FRAMECAD Certified HEX Head or for applications that require a flush finish use FRAMECAD Flat Head Screws.

For Screw numbers please refer to engineers' specifications.

Product	Item Code	Size	Description	Carton Qty
HWH FrameFix DP	Ideal for panel to panel fixing during frame erection and for fixing connectors.			
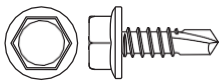	307387	10g x 19mm	Hex Head FrameFix DP, 1000hrs, Loose	5,000
	002409	12g x 25mm	Hex Head FrameFix DP, 1000hrs, Loose	5,000
FRAMECAD Flathead	Ideal for connecting metal strapping or bracing and adding additional strength to connectors.			
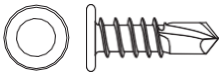	001539	10g x 16mm	FRAMECAD Flathead DP, 1000hrs, Loose	10,000

Typical Installation

FRAMECAD Connector Plates are specifically designed and engineered to make them easy and efficient to use with the practical geometry of steel trusses and framing.

For Screw numbers please refer to the engineers' specification.

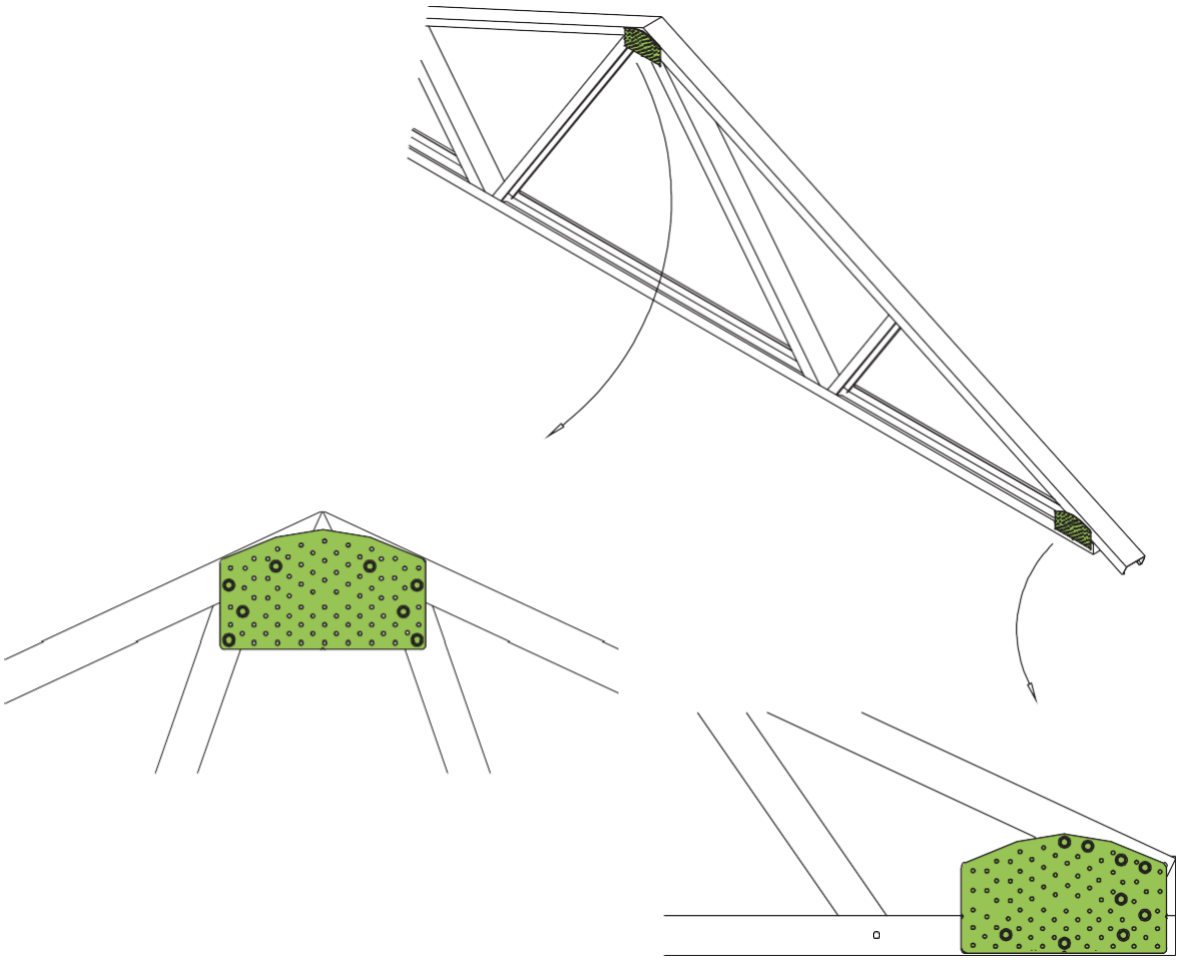

Ordering and Packaging:

Item Code	Description	Qty
009803	AHCP-A2 Apex Heel 1.15mm	50

This document is current as of October 2026 and supersedes all previous versions.

The material in this document is provided for general information purposes only. Although all reasonable efforts have been made to ensure that the information is current and accurate as at the date of issue, the information provided is selective and may not be complete or suitable for your intended use or jurisdiction. No information in this document constitutes, or shall be relied upon as constituting, the giving of advice of any nature. Nor is any such information to be used as a substitute for specific advice from appropriate independent professional advisors in your jurisdiction regarding your particular facts and circumstances or as a substitute for compliance with the requirements of applicable regulatory authorities or laws. You should not act (or refrain from acting) based upon information provided by FRAMECAD without independently verifying the original source information and, making your own independent assessment, with the assistance of appropriate independent professional advisors, regarding your particular facts and circumstances. FRAMECAD makes no representation or warranty, express or implied, as to the accuracy, completeness or suitability for purpose, of any information in this document. To the extent permitted by law, FRAMECAD accepts no responsibility to the recipient or any other person for any loss, damage, cost or expense (whether direct or indirect) incurred and arising out of or in connection with any use or reliance by any of them on the information in this document including, but not limited to, as a result of any error, omission or misrepresentation in any information or statement in this document.

This limitation of liability includes but is not limited to incidental, special or consequential damages, damages for loss of business or other profits. Liability which cannot legally be excluded is limited to the maximum extent possible.

FRAMECAD Ltd, logos and Trademarks are the property of FRAMECAD Ltd. Copyright 2026 FRAMECAD Ltd.

Reproduction of any part of this document is prohibited, except with the prior written consent of FRAMECAD Ltd.